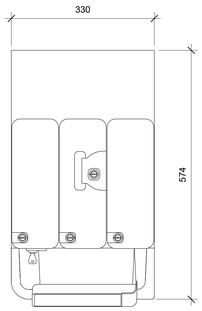

1 SCHAERER SKYE - PLAN VIEW
1 : 5

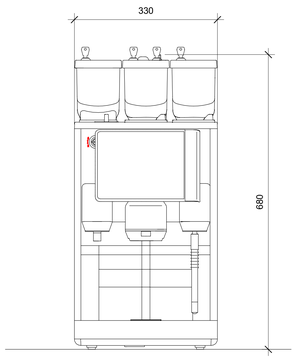

2 SCHAERER SKYE - FRONT VIEW
1 : 5

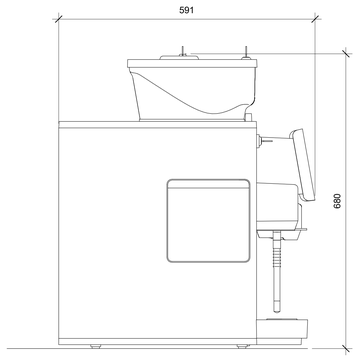

3 SCHAERER SKYE - SIDE VIEW
1 : 5

Notes:

Contractor must verify all dimensions on site before commencing any work or shop drawings. Only figured dimensions to be taken from this drawing.
Do not scale off this drawing. Drawings based on design and drawing content subject to Statutory Requirements and Approvals.

A0

No.	Description	Date
1	First Issue	26/06/2023

LIQUIDLINE®

Head Office
11 Holywells Close
Ipswich
IP3 0AW

Sheet number: A140

Date: 26/06/2023

Drawn by: Liquidline

Website
https://www.liquidline.co.uk/brands/schaerer/

Scale: 1 : 5